BONOMI GROUP

BONOMI NORTH AMERICA

MOD. 270

Technical specifications

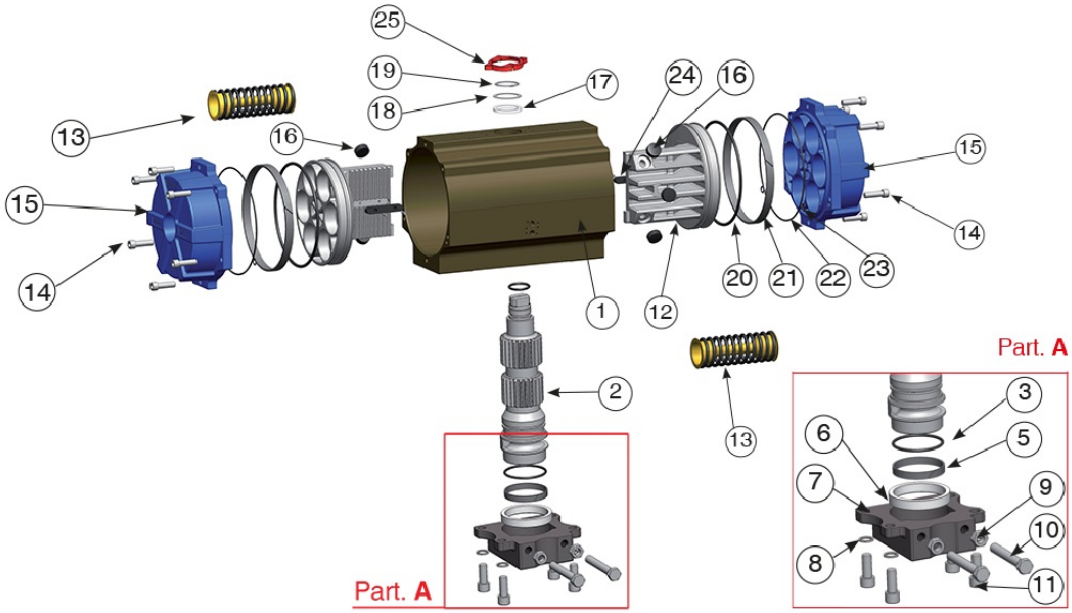

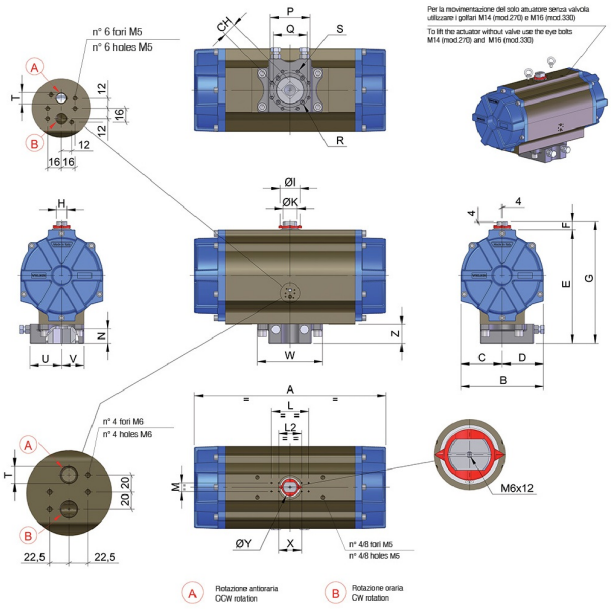

POSITION	PART NAME	MATERIAL	TREATMENT	N.° PIECES
1	Body	Extruded aluminium	Ossidato duro - Hard anodized	1
2	Anti-blowout pinion	Steel	Nichelato - Nickel plated	1
3*	O-ring	FKM (VITON)	-	1
4*	O-ring	FKM (VITON)	-	1
5*	Antifriction ring	P.T.F.E 15% graphite	-	1
6	Antifriction ring	P.T.F.E	-	1
7	Plate	GGG40	Verniciato - Painted	1
8	Washer	Stainless steel	-	4
9	Stop bolt retaining nut	Stainless steel	-	2
10	Stop crew	Steel	Zincato - Zinc plated	2
11	Fixing screws	Stainless steel	-	4
12	Piston	Die cast aluminium	-	2
13	Precompressed spring	Steel	Verniciata - Painted	-
14	End cap fixing screw	Stainless steel	-	12
14	16	STAINLESS STEEL	-	-
15	End cap	Die cast aluminium	Verniciato - Painted	2
16*	Thrust block	POM	-	6
17*	Spacer ring	POM	-	1
18	Pinion washer	Stainless steel	-	1
19	Snap ring	Steel	Nichelato - Nickel plated	1
20*	O-ring	FKM (VITON)	-	2
21*	Antifriction ring	P.T.F.E 15% graphite	-	2
22	O-ring	FKM (VITON)	-	2
23	O-ring	FKM (VITON)	-	mod. 270 4
23	mod. 330 2	mod. 330 2	-	-
24	Anti blowout key	POM	-	2
25	Position indicator	Thermoplastic rubber TPE	-	1

* Parts subject to wear.

SIZE	PATTERN ISO 5211	CH	A	B	C	D	E	F	G	H	ØI	ØK	L	L2	M	N	Q	R	T NPT	U	V	W	Z	X	ØY
270	F16	46**	26.46	11.42	5.71	5.71	15.71	1.18	16.89	1.42	2.76	1.97	5.12	3.15	1.18	1.97	6.50	3/4-10 UNC 2Bx1.18”	1/4”	4.37	3.11	9.06	2.68	3.17	2.36

* 45° square drive only.