BONOMI NORTH AMERICA

SUPER-SFER

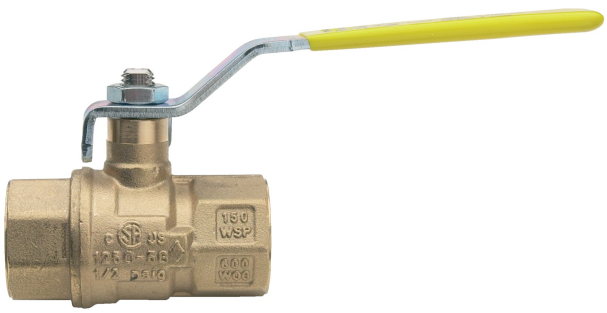

161N - 162N

COMPACT STYLE

Brass ball valve, FNPT threaded, full port.
- Pressure rating 600 WOG-150 WSP.
- Temperature range -4°F to +366°F.
- ANSI B1.20.1 connections.
- Blow-out proof stem, chrome plated brass ball.
- PTFE seats and double O-ring stem packing.
- 100% electronically tested in the open and closed position at 80 psi.
- Not to be used for drinking water.
- Valve to be used in fully open or fully closed position.

161N: LEVER HANDLE - size 1/2” to 4”.
162N: T-HANDLE - size 1/2” to 1”.
For sizes 1/4”, 3/8” see 171N.

MEETS THE DESIGN CRITERIA OF MSS SP-110.

Technical specifications

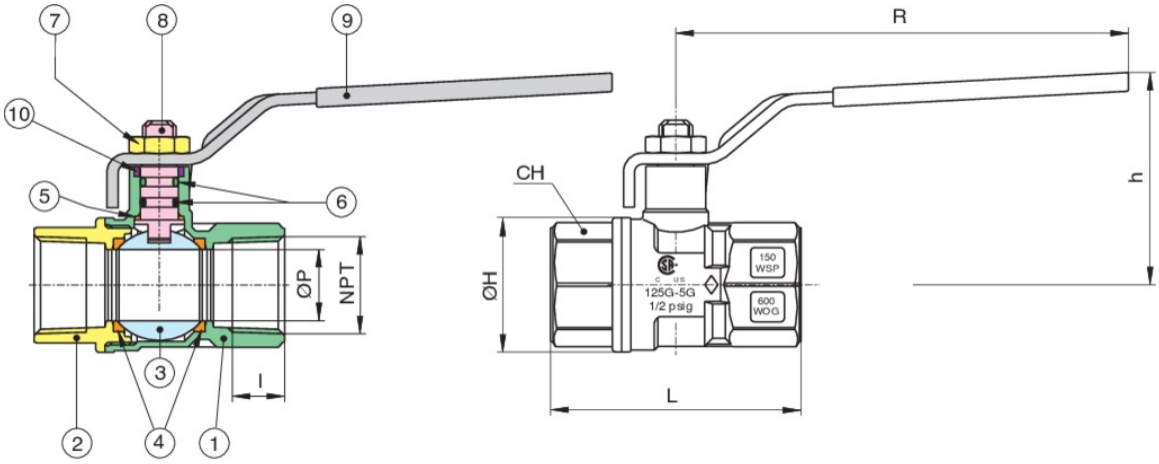

The Buna O-ring is fitted to the stem of the valve as the best possible protection against potential gas leakage under extreme duty, or low pressure applications. A secondary PTFE stem seal will also assure that the valve is suitable for use up to 366°F.

POSITION	PART NAME	MATERIAL	N.° PIECES
1	BODY	BRASS C37700	1
2	END CONNECTION	BRASS C37700	1
3	BALL	BRASS C37700	1
4	BALL SEAT	PTFE	2
5	THRUST WASHER	PTFE	1
6	O-RING	FKM (VITON)	1
6	O-RING	NBR	1
7	NUT	STEEL CL04	1
8	STEM	BRASS C38500	1
9	HANDLE	STEEL DD11	1
10	PACKING RING	PTFE	1

SIZE	ØP	I	L	ØH	CH	R	H	CV	PSI	WEIGHT (LBS)
1/2"	0.55	0.54	2.22	1.18	0.98	3.78	1.77	18.15	600	0.4
3/4"	0.75	0.55	2.46	1.42	1.22	4.76	2.22	32.37	600	0.68
1"	0.94	0.66	3.01	1.71	1.5	4.76	2.32	47.98	600	0.98
1 1/4"	1.19	0.68	3.37	2.09	1.89	5.94	2.85	97.8	600	1.66
1 1/2"	1.5	0.68	3.7	2.56	2.13	5.94	3.09	252.6	600	2.16
2"	1.95	0.7	4.31	3.39	2.64	6.3	3.7	290.75	600	3.52
2 1/2"	2.44	0.93	5.16	4.09	3.27	8.07	4.59	593.06	600	6.67
3"	2.99	1.02	5.94	4.96	3.86	8.07	4.98	958.84	600	9.82
4"	2.99	1.09	6.5	4.96	4.92	8.07	4.98	1526.59	600	12.57

WARNING: This product can expose you to chemicals including lead, which is known to the State of California to cause cancer and birth defects or other reproductive harm. For more information go to **www.p65warnings.ca.gov**.

Certifications

FM_400 WOG-up to 2"

CSA-up to 2"

UL-up to 2"

TSSA