BONOMI NORTH AMERICA

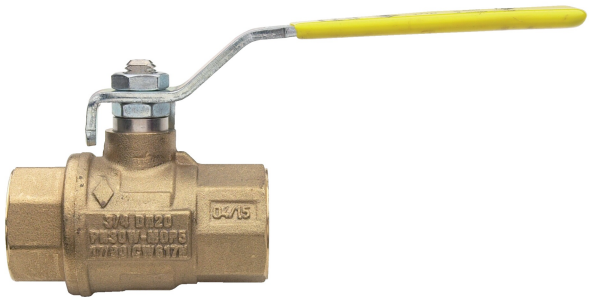

171N - 172N

COMMERCIAL STYLE

Brass ball valve, FNPT threaded, full port.
- Pressure rating 600 WOG-150 WSP.
- Temperature range -4°F to +366°F.
- ANSI B1.20.1 connections.
- Blow-out proof stem, chrome plated brass ball.
- PTFE seats, seals, and thrust washer.
- Adjustable stem packing.
- 100% electronically tested in the open and closed position at 80 psi.
- Not to be used for drinking water.
- Valve to be used in fully open or fully closed position.

171N: LEVER HANDLE - size 1/4” to 4”.
172N: T HANDLE - size 1/4” to 1”.
171S: BALL AND STEM IN STAINLESS STEEL AISI 316 - size 1/4” to 4”.
171NCR: CHROME PLATED - size 1/4” to 4”.

MEETS THE DESIGN CRITERIA OF MSS SP-110.

Technical specifications

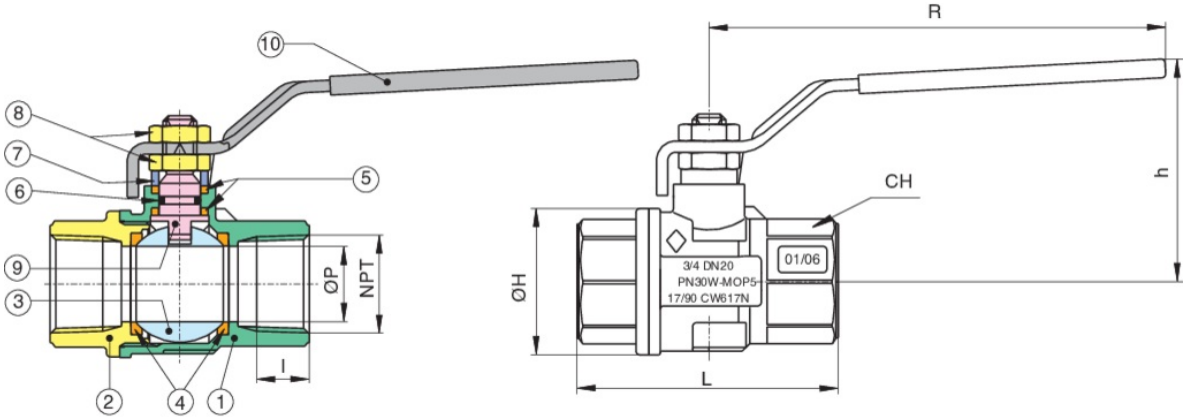

POSITION	PART NAME	MATERIAL	N.° PIECES
1	BODY	BRASS C37700	1
2	END CONNECTION	BRASS C37700	1
3	BALL	BRASS C37700	1
4	BALL SEAT	PTFE	2
5	THRUST WASHER/STEM SEAT	PTFE	2
6	O-RING	NBR	1
7	PACKING GLAND	BRASS C38500	1
8	NUT	STEEL CL 04	2
9	STEM	BRASS C38500	1
10	HANDLE	FE DD11 UNI EN 10111	1

SIZE	ØP	I	L	ØH	CH	R	H	CV	PSI	WEIGHT (LBS)
1/4"	0.39	0.39	2.02	0.9	0.78	3.78	1.65	6.24	600	0.34
3/8"	0.39	0.4	2.02	0.9	0.78	3.78	1.65	6.94	600	0.3
1/2"	0.59	0.53	2.44	1.25	0.98	3.78	1.81	18.84	600	0.46
3/4"	0.78	0.55	2.71	1.53	1.22	4.76	2.28	34.1	600	0.79
1"	0.98	0.66	3.07	1.92	1.49	4.76	2.44	49.71	600	1.15
1 1/4"	1.25	0.68	3.42	2.32	1.88	5.94	3	102.89	600	1.99
1 1/2"	1.57	0.68	3.89	2.87	2.12	5.94	3.23	265.9	600	2.74
2"	1.94	0.69	4.33	3.38	2.63	6.3	3.74	306.36	600	4.23
2 1/2"	2.56	0.93	5.59	4.37	3.54	8.07	4.84	624.28	600	8.36
3"	3.15	1.02	6.46	5.35	4.13	8.07	5.24	1009.25	600	12.96
4"	3.94	1.09	7.6	6.54	5.12	10.24	6.5	1606.94	600	21.81

WARNING: This product can expose you to chemicals including lead, which is known to the State of California to cause cancer and birth defects or other reproductive harm. For more information go to **www.p65warnings.ca.gov**.

Certifications

FM up to 2"

CSA International

UL-up to 2"

TSSA