BONOMI NORTH AMERICA

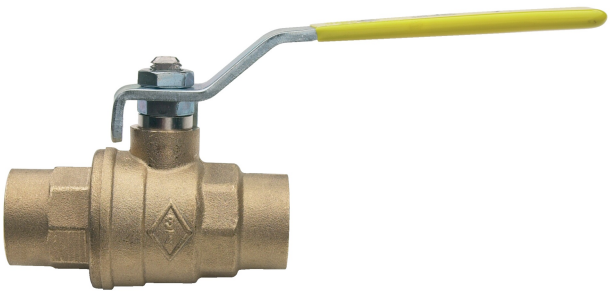

1715 - 1725

COMMERCIAL STYLE

Brass ball valve with solder ends, full port.
- Pressure rating 600 WOG-150 WSP.
- Temperature range -4°F to +366°F.
- ANSI B16.18 connections.
- Blow-out proof stem, chrome plated brass ball.
- PTFE seats, seals, and thrust washer.
- Adjustable stem packing.
- 100% electronically tested in the open and closed position at 80 psi.
- Not to be used for drinking water.
- Valve to be used in fully open or fully closed position.

1715: LEVER HANDLE - size 1/2” to 4”.
1725: T-HANDLE - size 1/2” to 1”.

MEETS THE DESIGN CRITERIA OF MSS SP-110.

Technical specifications

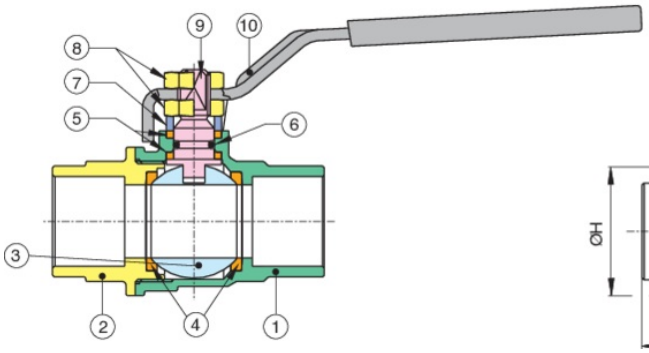

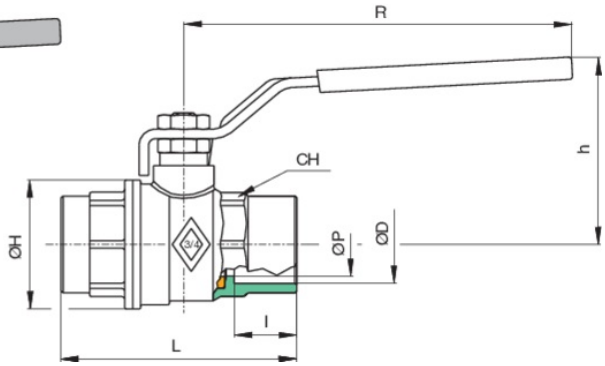

POSITION	PART NAME	MATERIAL	N.° PIECES
1	BODY	BRASS C37700	1
2	END CONNECTION	BRASS C37700	1
3	BALL	BRASS C37700	1
4	BALL SEAT	PTFE	2
5	THRUST WASHER/STEM SEAT	PTFE	2
6	O-RING	NBR	1
7	PACKING GLAND	BRASS C38500	1
8	NUT	STEEL 6/S	2
9	STEM	BRASS C38500	1
10	HANDLE	FE DD11 UNI EN 10111	1

SIZE	ØP	L	I	H	R	ØD	ØH	CH	CV	PSI	WEIGHT (LBS)
1/2"	0.57	2.58	0.5	1.81	3.78	0.63	1.3	0.98	18.84	600	0.49
3/4"	0.76	3	0.75	2.28	4.76	0.88	1.53	1.22	34.1	600	0.8
1"	0.98	3.56	0.91	2.44	4.76	1.13	1.93	1.49	49.71	600	1.17
1 1/4"	1.26	4.09	0.96	3	5.94	1.38	2.32	1.89	102.89	600	1.97
1 1/2"	1.57	4.56	1.1	3.23	5.94	1.63	2.87	2.12	265.9	600	2.72
2"	1.95	5.45	1.34	3.74	6.3	2.13	3.38	2.64	306.36	600	4.25
2 1/2"	2.56	6.9	1.47	4.84	8.11	2.63	4.37	3.54	624.28	600	9.44
3"	3.05	8.05	1.67	5.23	8.11	3.13	5.35	4.13	1009.25	600	14.51
4"	3.94	10.25	2.16	6.49	10.27	4.13	6.53	5.12	1606.94	600	24.8

WARNING: This product can expose you to chemicals including lead, which is known to the State of California to cause cancer and birth defects or other reproductive harm. For more information go to **www.p65warnings.ca.gov**.

Certifications

TSSA