BONOMI NORTH AMERICA

383M

MINI BALL VALVE

Nickel plated brass ball valve mini series, standard port.
- Pressure rating 450 psi.
- Temperature range -4°F to +330°F.
- ANSI B1.20.1 connections.
- Blow-out proof stem, chrome plated brass ball.
- PTFE seats and FKM (Viton®) seal.
- 100% electronically tested in the open and closed position at 80 psi.
- Not to be used for drinking water.
- Valve to be used in fully open or fully closed position.

383N: FNPT threaded - size 1/8” to 3/4”.
383M: MNPT x FNPT threaded - size 1/8” to 3/4”.

MEETS THE DESIGN CRITERIA OF MSS SP-110.

Technical specifications

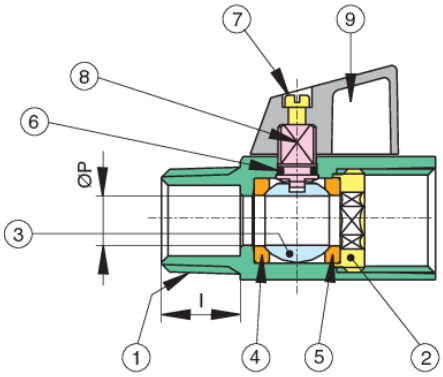

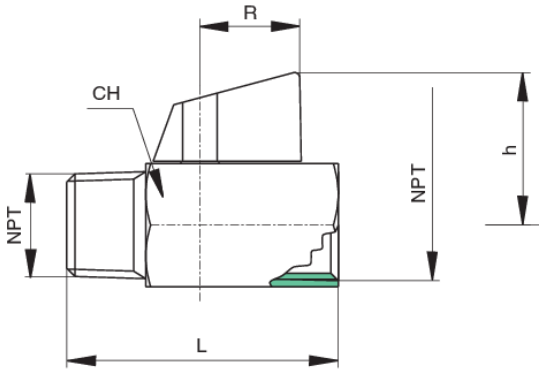

POSITION	PART NAME	MATERIAL	N.° PIECES
1	BODY	BRASS C37700	1
2	RETAINING BUSH	BRASS C38500	1
3	BALL	BRASS C38500	1
4	BALL SEAT	PTFE	1
5	BALL SEAT	PTFE	1
6	O-RING	FKM (VITON)	1
7	SCREW	STEEL DD11	1
8	STEM	BRASS C38500	1
9	HANDLE	GLASS REINFORCED NYLON	1

SIZE	ØP	CH	I	H	L	R	CV	PSI	WEIGHT (LBS)
1/8"	0.31	0.83	0.27	1.16	1.61	0.81	4.97	450	0.19
1/4"	0.31	0.83	0.39	1.16	1.69	0.81	4.97	450	0.18
3/8"	0.31	0.83	0.41	1.16	1.69	0.81	3.12	450	0.17
1/2"	0.39	0.98	0.54	1.24	2.17	0.81	6.24	450	0.31
3/4"	0.47	1.18	0.56	1.32	2.36	0.81	8.44	450	0.47

WARNING: This product can expose you to chemicals including lead, which is known to the State of California to cause cancer and birth defects or other reproductive harm. For more information go to **www.p65warnings.ca.gov**.

Certifications

CSA International

TSSA